INTERNAL DIMENSIONS:
L = 20.5"
W = 34.5"
H = 26"

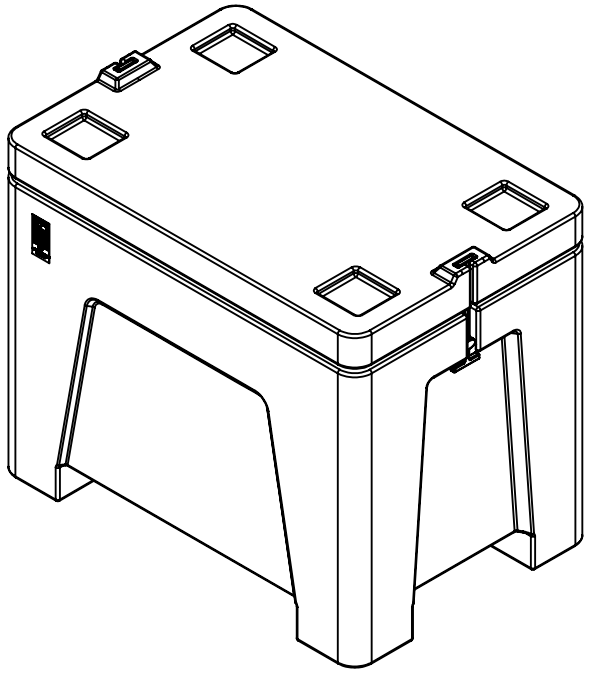

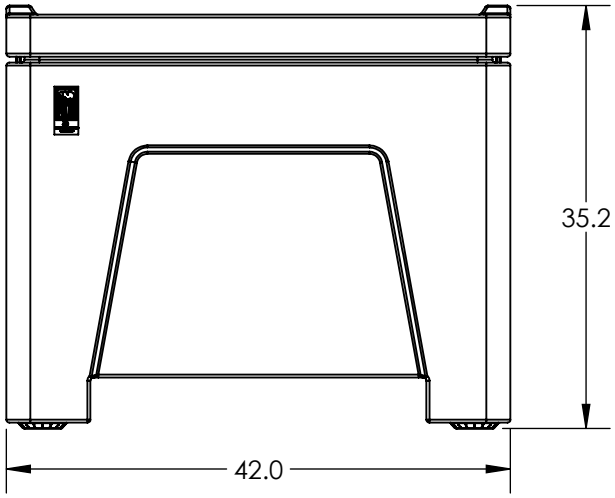

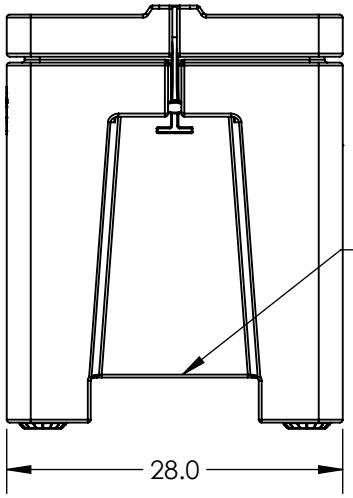

DO NOT SCALE	DRAWN BY		TITLE: ASM INSUL BIN PB11 RMV-LID	REVISION A
STATUS: Released	IGG			SHEET 1 OF 1
			PART NO. 1930400M___01	ENG. ID. D007334

ALL DIMENSIONS ARE IN INCHES, NOMINAL, & SUBJECT TO CHANGE WITHOUT NOTICE.
ALL DIMENSIONS ON ROTATIONAL MOLDED PARTS ARE SUBJECT TO A ± 3% TOLERANCE.